COLESEVELAM HYDROCHLORIDE- colesevelam hydrochloride tablet, coated
Amneal Pharmaceuticals of New York LLC

HIGHLIGHTS OF PRESCRIBING INFORMATION
These highlights do not include all the information needed to use COLESEVELAM HYDROCHLORIDE TABLETS safely and effectively. See full prescribing information for COLESEVELAM HYDROCHLORIDE TABLETS.

COLESEVELAM HYDROCHLORIDE tablets, for oral use
Initial U.S. Approval: 2000

INDICATIONS AND USAGE

Colesevelam hydrochloride is a bile acid sequestrant indicated as an adjunct to diet and exercise to:

- reduce elevated low-density lipoprotein cholesterol (LDL-C) in adults with primary hyperlipidemia. (1.1)
- reduce LDL-C levels in boys and postmenarchal girls, 10 to 17 years of age, with heterozygous familial hypercholesterolemia (HeFH), unable to reach LDL-C target levels despite an adequate trial of diet and lifestyle modification. (1.1)
- improve glycemic control in adults with type 2 diabetes mellitus. (1.2)

Limitations of Use (1.3):

- Do not use for treatment of type 1 diabetes or for diabetic ketoacidosis.
- Not studied in Fredrickson Type I, III, IV, and V dyslipidemias.

DOSAGE AND ADMINISTRATION

- Obtain lipid parameters, including serum triglyceride (TG) levels, before starting colesevelam hydrochloride tablets. (2.1)
- The recommended dosage for adults and for boys and postmenarchal girls aged 10 to 17 years with primary hyperlipidemia is 3.75 grams daily. Colesevelam hydrochloride tablets should be taken as follows (2.2, 2.4):

Tablets
Take 6 tablets once daily or 3 tablets twice daily with a meal and liquid.

DOSAGE FORMS AND STRENGTHS

- Tablets: 625 mg. (3)

CONTRAINDICATIONS

- Patients with serum triglyceride levels >500 mg/dL. (4)
- Patients with a history of hypertriglyceridemia-induced pancreatitis. (4)
- Patients with a history of bowel obstruction. (4)

WARNINGS AND PRECAUTIONS

- *Hypertriglyceridemia and Pancreatitis:* Colesevelam hydrochloride can increase TG. Hypertriglyceridemia can cause acute pancreatitis. Monitor lipids, including TG. Instruct patients to discontinue colesevelam hydrochloride and seek prompt medical attention if the symptoms of acute pancreatitis occur. (5.1)
- *Gastrointestinal Obstruction:* Cases of bowel obstruction have occurred. Colesevelam hydrochloride is not recommended in patients with gastroparesis, other gastrointestinal motility disorders, and in those who have had major gastrointestinal tract surgery and who may be at risk for bowel obstruction. (5.2)
- *Vitamin K or Fat-Soluble Vitamin Deficiencies:* Colesevelam hydrochloride may decrease absorption of fat-soluble vitamins. Patients with a susceptibility to deficiencies of vitamin K (e.g., patients on warfarin, patients with malabsorption syndromes) or other fat-soluble vitamins may be at increased risk. Patients on oral vitamin supplementation should take their vitamins at least 4 hours prior to colesevelam hydrochloride. (5.3)
- *Drug Interactions:* Due to the potential for decreased absorption of other drugs that have not been tested for interaction, consider administering at least 4 hours prior to colesevelam hydrochloride. (5.4, 7, 12.3)

ADVERSE REACTIONS

In clinical trials, the most common (incidence ≥2% and greater than placebo) adverse reactions with colesevelam hydrochloride included constipation, dyspepsia and nausea. (6.1)

To report SUSPECTED ADVERSE REACTIONS, contact Amneal Pharmaceuticals at 1-877-835-5472 or FDA at 1-800-FDA-1088 or *www.fda.gov/medwatch.*

DRUG INTERACTIONS

Concomitant use with colesevelam hydrochloride may decrease the exposure of the following drugs:
Drugs with a narrow therapeutic index (e.g., cyclosporine), phenytoin, thyroid hormone replacement therapy, warfarin, oral contraceptives containing ethinyl estradiol and norethindrone, olmesartan medoxomil, and sulfonylureas (glimepiride, glipizide, glyburide). Administer these drugs 4 hours prior to colesevelam hydrochloride. For patients on warfarin, monitor International Normalized Ratio (INR) frequently during initiation then periodically. (7.1)

Concomitant use with colesevelam hydrochloride may increase the exposure of the following drugs:
Metformin extended release. Monitor patient's glycemic control. (7.2)

See 17 for PATIENT COUNSELING INFORMATION.

Revised: 9/2024

FULL PRESCRIBING INFORMATION: CONTENTS*

1 INDICATIONS AND USAGE
1.1 Primary Hyperlipidemia
1.2 Type 2 Diabetes Mellitus
1.3 Limitations of Use
2 DOSAGE AND ADMINISTRATION
2.1 Testing Prior to Initiation of Colesevelam Hydrochloride Tablets
2.2 Recommended Dosage in Primary Hyperlipidemia and Type 2 Diabetes Mellitus
2.3 Important Dosing Information for Primary Hyperlipidemia
2.4 Administration Instructions
3 DOSAGE FORMS AND STRENGTHS
4 CONTRAINDICATIONS
5 WARNINGS AND PRECAUTIONS
5.1 Hypertriglyceridemia and Pancreatitis
5.2 Gastrointestinal Obstruction
5.3 Vitamin K or Fat-Soluble Vitamin Deficiencies
5.4 Drug Interactions
6 ADVERSE REACTIONS
6.1 Clinical Studies Experience
6.2 Post-marketing Experience
7 DRUG INTERACTIONS
7.1 Colesevelam Hydrochloride Drug Interactions that Decrease the Exposure of the Concomitant Medication
7.2 Colesevelam Hydrochloride Drug Interactions that Increase the Exposure of the Concomitant Medication
8 USE IN SPECIFIC POPULATIONS
8.1 Pregnancy
8.2 Lactation
8.3 Females and Males of Reproductive Potential
8.4 Pediatric Use
8.5 Geriatric Use
8.6 Renal Impairment
10 OVERDOSAGE
11 DESCRIPTION
12 CLINICAL PHARMACOLOGY
12.1 Mechanism of Action
12.2 Pharmacodynamics
12.3 Pharmacokinetics
13 NONCLINICAL TOXICOLOGY
13.1 Carcinogenesis, Mutagenesis, Impairment of Fertility
13.2 Animal Toxicology and/or Pharmacology
14 CLINICAL STUDIES
14.1 Primary Hyperlipidemia
14.2 Type 2 Diabetes Mellitus
16 HOW SUPPLIED/STORAGE AND HANDLING
17 PATIENT COUNSELING INFORMATION

* Sections or subsections omitted from the full prescribing information are not listed.

FULL PRESCRIBING INFORMATION

1 INDICATIONS AND USAGE

1.1 Primary Hyperlipidemia

Colesevelam hydrochloride tablets are indicated as an adjunct to diet and exercise to reduce elevated low-density lipoprotein cholesterol (LDL-C) in adults with primary hyperlipidemia.

Colesevelam hydrochloride tablets are indicated to reduce LDL-C levels in boys and postmenarchal girls, 10 to 17 years of age, with heterozygous familial hypercholesterolemia (HeFH) who are unable to reach LDL-C target levels despite an adequate trial of dietary therapy and lifestyle modification.

1.2 Type 2 Diabetes Mellitus

Colesevelam hydrochloride tablets are indicated as an adjunct to diet and exercise to improve glycemic control in adults with type 2 diabetes mellitus.

1.3 Limitations of Use

- Colesevelam hydrochloride tablets should not be used for the treatment of type 1 diabetes or for the treatment of diabetic ketoacidosis.
- Colesevelam hydrochloride tablets have not been studied in Fredrickson Type I, III, IV, and V dyslipidemias.

2 DOSAGE AND ADMINISTRATION

2.1 Testing Prior to Initiation of Colesevelam Hydrochloride Tablets

Obtain lipid parameters, including triglyceride (TG) levels, before starting colesevelam hydrochloride tablets. Colesevelam hydrochloride tablets are contraindicated in patients with TG levels >500 mg/dL *[see Contraindications (4)* and *Warnings and Precautions (5.1)]*.

2.2 Recommended Dosage in Primary Hyperlipidemia and Type 2 Diabetes Mellitus

The recommended dosage of colesevelam hydrochloride tablets for adults and for boys and postmenarchal girls aged 10 to 17 years with primary hyperlipidemia is 3.75 grams daily. The recommended dosage of colesevelam hydrochloride tablets for adults with type 2 diabetes mellitus is 3.75 grams daily. Colesevelam hydrochloride tablets should be taken as follows:

<u>Tablets</u>

Take 6 tablets once daily or 3 tablets twice daily. Due to tablet size, colesevelam hydrochloride for oral suspension is recommended for use in the pediatric population.

2.3 Important Dosing Information for Primary Hyperlipidemia

Colesevelam hydrochloride can be dosed at the same time as a statin, or colesevelam hydrochloride and the statin can be dosed apart. Monitor lipid levels within 4 to 6 weeks after initiation of colesevelam hydrochloride.

2.4 Administration Instructions

<u>Tablets</u>

Take colesevelam hydrochloride tablets with a meal and liquid. For patients with difficulty swallowing tablets, use colesevelam hydrochloride for oral suspension *[see Warnings and Precautions (5.2)].*

3 DOSAGE FORMS AND STRENGTHS

- 625 mg tablets are off-white to pale yellow film-coated oval tablets, debossed with “L61” on one side and plain on the other side.

4 CONTRAINDICATIONS

Colesevelam hydrochloride is contraindicated in patients with:

- Serum TG concentrations >500 mg/dL *[see Warnings and Precautions (5.1)]*
- History of hypertriglyceridemia-induced pancreatitis *[see Warnings and Precautions (5.1)]*
- A history of bowel obstruction *[see Warnings and Precautions (5.2)]*

5 WARNINGS AND PRECAUTIONS

5.1 Hypertriglyceridemia and Pancreatitis

Colesevelam hydrochloride, like other bile acid sequestrants, can increase serum TG concentrations. Hypertriglyceridemia can cause acute pancreatitis.

Colesevelam hydrochloride had effects on serum TG (median increase 5% compared to placebo) in trials of patients with primary hyperlipidemia.

In trials in patients with type 2 diabetes, greater increases in TG levels occurred when colesevelam hydrochloride was used as monotherapy (median increase 9.7% compared to placebo) and when colesevelam hydrochloride was used in combination with pioglitazone (median increase 11% compared to placebo in combination with pioglitazone), sulfonylureas (median increase 18% compared to placebo in combination with sulfonylureas), and insulin (median increase 22% compared to placebo in combination with insulin) *[see Adverse Reactions (6.1)].*

Obtain lipid parameters, including TG levels, before starting colesevelam hydrochloride and periodically thereafter. Colesevelam hydrochloride is contraindicated in patients with TG levels >500 mg/dL or patients with a history of hypertriglyceridemia-induced pancreatitis *[see Contraindications (4)]*. Patients with TG levels greater than 300 mg/dL could have greater increases in serum TG levels with colesevelam hydrochloride and may require additional TG monitoring. Instruct patients to discontinue colesevelam hydrochloride and seek prompt medical attention if the symptoms of acute pancreatitis occur (e.g., severe abdominal pain with or without nausea and vomiting). Discontinue colesevelam hydrochloride if TG levels exceed 500 mg/dL *[see Adverse Reactions (6.1)]*.

5.2 Gastrointestinal Obstruction

Post-marketing cases of bowel obstruction have occurred with colesevelam hydrochloride *[see Adverse Reactions (6.2)]*. Because of its constipating effects, colesevelam hydrochloride is not recommended in patients with gastroparesis, other gastrointestinal motility disorders, and in those who have had major gastrointestinal tract surgery and who may be at risk for bowel obstruction. Colesevelam hydrochloride is contraindicated in patients with a history of bowel obstruction *[see Contraindications (4)]*. Instruct patients to promptly discontinue colesevelam hydrochloride and seek medical attention if severe abdominal pain or severe constipation occurs.

Because of the tablet size, colesevelam hydrochloride tablets can cause dysphagia or esophageal obstruction. For patients with difficulty swallowing tablets, use colesevelam hydrochloride for oral suspension.

5.3 Vitamin K or Fat-Soluble Vitamin Deficiencies

Colesevelam hydrochloride may decrease the absorption of fat-soluble vitamins A, D, E, and K. Patients with a susceptibility to deficiencies of vitamin K (e.g., patients on warfarin, patients with malabsorption syndromes) or other fat-soluble vitamins may be at increased risk when taking colesevelam hydrochloride.

Patients on oral vitamin supplementation should take their vitamins at least 4 hours prior to colesevelam hydrochloride *[see Drug Interactions (7.1)].*

5.4 Drug Interactions

Colesevelam hydrochloride reduces gastrointestinal absorption of some drugs. Administer drugs with a known interaction at least 4 hours prior to colesevelam hydrochloride *[see Drug Interactions (7)]*.

Due to the potential for decreased absorption of other drugs that have not been tested for interaction, especially those with a narrow therapeutic index, consider administering at least 4 hours prior to colesevelam hydrochloride *[see Clinical Pharmacology (12.3)].*

6 ADVERSE REACTIONS

The following important adverse reactions are described below and elsewhere in the labeling:

- Hypertriglyceridemia and Pancreatitis *[see Warnings and Precautions (5.1)]*
- Gastrointestinal Obstruction *[see Warnings and Precautions (5.2)]*
- Vitamin K or Fat-Soluble Vitamin Deficiencies *[see Warnings and Precautions (5.3)]*

6.1 Clinical Studies Experience

Because clinical studies are conducted under widely varying conditions, adverse reaction rates observed in the clinical studies of a drug cannot be directly compared to rates in clinical studies of another drug and may not reflect the rates observed in practice.

Primary Hyperlipidemia

In 7 double-blind, placebo-controlled clinical trials, 807 patients with primary hyperlipidemia (age range 18 to 86 years, 50% women, 90% Caucasians, 7% Blacks, 2% Hispanics, 1% Asians) and elevated LDL-C were treated with colesevelam hydrochloride 1.5 g/day to 4.5 g/day from 4 to 24 weeks (total exposure 199 patient-years).

Table 1: Clinical Studies of Colesevelam Hydrochloride for Primary Hyperlipidemia: Adverse Reactions Reported in ≥ 2% of Patients and More Commonly than in Placebo

	Colesevelam Hydrochloride	**Placebo**
	N = 807	**N = 258**
Constipation	11.0%	7.0%
Dyspepsia	8.3%	3.5%
Nausea	4.2%	3.9%
Accidental injury	3.7%	2.7%
Asthenia	3.6%	1.9%
Pharyngitis	3.2%	1.9%
Flu syndrome	3.2%	3.1%
Rhinitis	3.2%	3.1%
Myalgia	2.1%	0.4%

Pediatric Patients 10 to 17 Years of Age

In an 8-week double-blind, placebo-controlled study, boys and post-menarchal girls, 10 to 17 years of age, with HeFH (n=194), were treated with colesevelam hydrochloride tablets (1.9 g to 3.8 g, daily) or placebo tablets.

Table 2: Clinical Study of Colesevelam Hydrochloride for Primary Hyperlipidemia in HeFH Pediatric Patients: Adverse Reactions Reported in ≥2% of Patients and More Commonly than in Placebo

	Colesevelam Hydrochloride	**Placebo**
	N = 129	**N = 65**
Nasopharyngitis	6.2%	4.6%
Headache	3.9%	3.1%
Fatigue	3.9%	1.5%
Creatine Phosphokinase Increase	2.3%	0.0%
Rhinitis	2.3%	0.0%

Vomiting	2.3%	1.5%

The reported adverse reactions during the additional 18-week open-label treatment period with colesevelam hydrochloride 3.8 g per day were similar to those during the double-blind period and included headache (7.6%), nasopharyngitis (5.4%), upper respiratory tract infection (4.9%), influenza (3.8%), and nausea (3.8%).

Type 2 Diabetes Mellitus

In 5 add-on combination and 1 monotherapy double-blind, 12 to 26-week, placebo-controlled clinical trials in patients with type 2 diabetes mellitus, 1,022 patients were treated with colesevelam hydrochloride. The mean exposure duration was 20 weeks (total exposure 393 patient-years). Patients were to receive 3.8 grams of colesevelam hydrochloride per day. The mean age of patients was 55.7 years, 52.8 percent of the population was male and 61.9% were Caucasian, 4.8% were Asian, and 15.9% were Black or African American. At baseline the population had a mean hemoglobin A1c (HbA1c) of 8.2% and 26% had past medical history suggestive of microvascular complications of diabetes.

Table 3 shows adverse reactions associated with the use of colesevelam hydrochloride in patients with type 2 diabetes. These adverse reactions were not present at baseline, occurred more commonly on colesevelam hydrochloride than on placebo, and occurred in at least 2% of patients treated with colesevelam hydrochloride.

Table 3: Clinical Studies of Colesevelam Hydrochloride for Type 2 Diabetes: Adverse Reactions Reported in ≥ 2 % of Patients and More Commonly than in Placebo

	Colesevelam Hydrochloride N=1,022	**Placebo N=1,010**
Constipation	6.5%	2.2%
Hypoglycemia	3.4%	3.1%
Dyspepsia	2.8%	1.0%
Nausea	2.6%	1.6%
Hypertension	2.6%	1.9%
Back Pain	2.3%	1.3%

A total of 5.3% of colesevelam hydrochloride-treated patients and 3.6% of placebo-treated patients were discontinued from the diabetes trials due to adverse reactions. This difference was driven mostly by gastrointestinal adverse reactions such as abdominal pain and constipation.

One patient in the add-on to sulfonylurea trial discontinued due to body rash and mouth blistering that occurred on the first day of dosing of colesevelam hydrochloride, which may represent a hypersensitivity reaction to colesevelam hydrochloride.

Hypertriglyceridemia

Patients with fasting serum TG levels above 500 mg/dL were excluded from the diabetes clinical trials. In the diabetes trials, 1292 (67.7%) patients had baseline fasting serum TG levels less than 200 mg/dL, 426 (22.3%) had baseline fasting serum TG levels between 200 and less than 300 mg/dL, 175 (9.2%) had baseline fasting serum TG levels between 300 and 500 mg/dL, and 16 (0.8%) had fasting serum TG levels greater than or equal to 500 mg/dL. The median baseline fasting TG concentration for the study population was 160 mg/dL; the median post-treatment fasting TG was 180 mg/dL in the colesevelam hydrochloride group and 162 mg/dL in the placebo group. Colesevelam hydrochloride therapy resulted in a median placebo-corrected increase in serum TG of 9.7% ($p = 0.03$) in the monotherapy study and of 5% ($p = 0.22$), 11% ($p < 0.001$), 18% ($p < 0.001$), and 22% ($p < 0.001$), when added to metformin, pioglitazone, sulfonylureas, and insulin, respectively. In comparison, colesevelam hydrochloride resulted in a median increase in serum TG of 5% compared to placebo ($p = 0.42$) in a 24-week monotherapy lipid-lowering trial.

Fasting TG concentrations ≥ 500 mg/dL occurred in 0.9% of colesevelam hydrochloride-treated patients compared to 0.7% of placebo-treated patients in the diabetes trials. Among these patients, the TG concentrations with colesevelam hydrochloride (median 606 mg/dL; interquartile range 570 mg/dL to 794 mg/dL) were similar to that observed with placebo (median 663 mg/dL; interquartile range 542 mg/dL to 984 mg/dL). Five (0.6%) patients on colesevelam hydrochloride and 3 (0.3%) patients on placebo developed TG elevations > 1,000 mg/dL.

Cardiovascular Adverse Reactions

During the diabetes trials, the incidence of patients with serious adverse reactions involving the cardiovascular system was 2.2% (22/1,022) in the colesevelam hydrochloride group and 1% (10/1,010) in the placebo group. These overall rates included disparate events (e.g., myocardial infarction, aortic stenosis, and bradycardia); therefore, the significance of this imbalance is unknown.

6.2 Post-marketing Experience

The following additional adverse reactions have been identified during post-approval use of colesevelam hydrochloride. Because these reactions are reported voluntarily from a population of uncertain size, it is generally not possible to reliably estimate their frequency or establish a causal relationship to drug exposure.

Adverse Reactions Resulting from Drug Interactions [see Drug Interactions (7)]: Increased seizure activity or decreased phenytoin levels in patients receiving phenytoin, reduced International Normalized Ratio (INR) in patients receiving warfarin therapy, and elevated thyroid-stimulating hormone (TSH) in patients receiving thyroid hormone replacement therapy.

Gastrointestinal: Bowel obstruction (in patients with a history of bowel obstruction or resection), dysphagia or esophageal obstruction (occasionally requiring medical intervention), fecal impaction, pancreatitis, abdominal distension, exacerbation of hemorrhoids, and increased transaminases.

Laboratory Abnormalities: Hypertriglyceridemia.

7 DRUG INTERACTIONS

7.1 Colesevelam Hydrochloride Drug Interactions that Decrease the Exposure of the Concomitant Medication

Table 4 includes a list of drugs that decrease exposure of the concomitant medication when administered concomitantly with colesevelam hydrochloride and instructions for preventing or managing them.

Table 4: Colesevelam Hydrochloride Drug Interactions that Decrease the Exposure of the Concomitant Medication

Drugs with a Narrow Therapeutic Index	
Clinical Impact:	Concomitant use with colesevelam hydrochloride may decrease the exposure of the narrow therapeutic index drug. *In vivo* drug interactions studies showed a decrease in exposure of cyclosporine when co-administered with colesevelam hydrochloride *[see Clinical Pharmacology (12.3)].*
Intervention:	Administer the narrow therapeutic index drug at least 4 hours prior to colesevelam hydrochloride. Monitor drug levels when appropriate.
Examples:	Cyclosporine
Phenytoin	
Clinical Impact:	There have been post-marketing reports of increased seizure activity or decreased phenytoin levels in patients receiving phenytoin *[see Adverse Reactions (6.2)].*
Intervention:	Administer phenytoin 4 hours prior to colesevelam hydrochloride.
Thyroid Hormone Replacement Therapy	

Clinical Impact:	*In vivo* drug interactions studies showed a decrease in exposure of levothyroxine when co-administered with colesevelam hydrochloride *[see Clinical Pharmacology (12.3)].* There have been post-marketing reports of elevated thyroid-stimulating hormone (TSH) in patients receiving thyroid hormone replacement therapy *[see Adverse Reactions (6.2)].*
Intervention:	Administer thyroid hormone replacement therapy 4 hours prior to colesevelam hydrochloride.
Warfarin	
Clinical Impact:	There have been post-marketing reports of reduced INR in patients receiving warfarin therapy *[see Adverse Reactions (6.2)].*
Intervention:	Monitor INR frequently during colesevelam hydrochloride initiation then periodically thereafter.
Oral Contraceptives Containing Ethinyl Estradiol and Norethindrone	
Clinical Impact:	*In vivo* drug interactions studies showed a decrease in exposure of ethinyl estradiol and norethindrone when co-administered with colesevelam hydrochloride *[see Clinical Pharmacology (12.3)].*
Intervention:	Administer oral contraceptives containing ethinyl estradiol and norethindrone 4 hours prior to colesevelam hydrochloride.
Olmesartan Medoxomil	
Clinical Impact:	*In vivo* drug interactions studies showed a decrease in olmesartan medoxomil when co-administered with colesevelam hydrochloride *[see Clinical Pharmacology (12.3)].*
Intervention:	Administer olmesartan medoxomil 4 hours prior to colesevelam hydrochloride.
Sulfonylureas	
Clinical Impact:	*In vivo* drug interactions studies showed a decrease in sulfonylureas when co-administered with colesevelam hydrochloride *[see Clinical Pharmacology (12.3)].*
Intervention:	Administer sulfonylureas 4 hours prior to colesevelam hydrochloride.
Examples:	Glimepiride, glipizide, and glyburide
Oral Vitamin Supplements	
Clinical Impact:	Colesevelam hydrochloride may decrease the absorption of fat-soluble vitamins A, D, E, and K *[see Warnings and Precautions (5.3)].*
Intervention:	Patients on oral vitamin supplementation should take their vitamins at least 4 hours prior to colesevelam hydrochloride.

7.2 Colesevelam Hydrochloride Drug Interactions that Increase the Exposure of the Concomitant Medication

Table 5: Colesevelam Hydrochloride Drug Interactions that Increase the Exposure of the Concomitant Medication

Metformin Extended-Release (ER)	
Clinical Impact:	*In vivo* drug interactions studies showed an increase in metformin extended release (ER) when co-administered with colesevelam hydrochloride *[see Clinical Pharmacology (12.3)].*
Intervention:	Monitor patients' glycemic control.

8 USE IN SPECIFIC POPULATIONS

8.1 Pregnancy

Risk Summary

Colesevelam hydrochloride is not absorbed systemically following oral administration, and maternal use is not expected to result in fetal exposure to the drug. Limited available data on the use of colesevelam hydrochloride are insufficient to determine a drug-associated risk of major congenital malformations or miscarriage. In animal reproduction studies, no evidence of either maternal or fetal toxicity was found in rats or rabbits exposed to colesevelam hydrochloride during the period of fetal

organogenesis at 8 and 5 times, respectively, the maximum recommended human dose (MRHD) of 3.75 g/day, based on body surface area (mg/m^2). No adverse effects on offspring survival and development were observed in rats administered 5 times the MRHD *(see Data).* Colesevelam hydrochloride may decrease the absorption of fat-soluble vitamins *[see Warnings and Precautions (5.3)].* There are no data available on the effect of colesevelam hydrochloride on the absorption of fat-soluble vitamins in pregnant women. If the patient becomes pregnant while taking colesevelam hydrochloride, the patient should be advised of the lack of known clinical benefit with continued use during pregnancy.

The estimated background risk of major birth defects and miscarriage for the indicated population is unknown. In the US general population, the estimated background risk of major birth defects and miscarriage in clinically recognized pregnancies is 2% to 4% and 15% to 20%, respectively.

Data

Human Data

There are no adequate and well-controlled studies of colesevelam hydrochloride use in pregnant women. In the post-marketing setting there have been infrequent reports of pregnancy with use of colesevelam hydrochloride and a causal association with congenital anomalies has not been established.

Animal Data

In pregnant rats given dietary doses of 0.3, 1.0, 3.0 g/kg/day colesevelam hydrochloride from gestation days 7 through 17, no teratogenic effects were observed. Exposures at 3.0 g/kg/day were 8 times the human exposure at 3.75 g/day MRHD, based on body surface area (mg/m^2).

In pregnant rabbits given oral gavage doses of 0.1, 0.5, 1.0 g/kg/day colesevelam hydrochloride from gestation days 6 through 18, no teratogenic effects were observed. Exposures at 1.0 g/kg/day were 5 times the human exposure at 3.75 g/day MRHD, based on body surface area (mg/m^2).

In pregnant rats given oral gavage doses of 0.1, 0.3, 1.0 g/kg/day colesevelam hydrochloride from gestation day 6 through lactation day 21 (weaning), no adverse effects on survival and development were observed. Exposures at 1.0 g/kg/day were 5 times the human exposure at 3.75 g/day MRHD, based on body surface area (mg/m^2).

8.2 Lactation

Risk Summary

Colesevelam hydrochloride is not absorbed systemically by the mother following oral administration, and breastfeeding is not expected to result in exposure of the child to colesevelam hydrochloride.

8.3 Females and Males of Reproductive Potential

Contraception

Use of colesevelam hydrochloride may reduce the efficacy of oral contraceptives. Advise patients to take oral contraceptives at least 4 hours prior to taking colesevelam hydrochloride *[see Drug Interactions (7)].*

8.4 Pediatric Use

Primary Hyperlipidemia

The safety and effectiveness of colesevelam hydrochloride to reduce LDL-C levels in boys and postmenarchal girls 10 to 17 years of age with HeFH who are unable to reach LDL-C target levels despite an adequate trial of dietary therapy and lifestyle modification have been established. Use of colesevelam hydrochloride for this indication is supported by a study in 129 colesevelam hydrochloride -treated pediatric patients aged 10 to 17 years with HeFH *[see Clinical Studies (14.1)]*. Adverse reactions commonly observed in pediatric patients compared to placebo, but not in adults, included headache (3.9%),

creatine phosphokinase increase (2.3%), and vomiting (2.3%) *[see Adverse Reactions (6.1)]*. There were no significant effects on fat-soluble vitamin levels or clotting factors in the adolescent boys or girls relative to placebo. Due to colesevelam hydrochloride tablet size, colesevelam hydrochloride for oral suspension is recommended for use in the pediatric population *[see Dosage and Administration (2.2, 2.4)].* The safety and effectiveness of colesevelam hydrochloride in pediatric patients with HeFH less than 10 years of age or in premenarchal females have not been established.

Type 2 Diabetes Mellitus

The safety and effectiveness of colesevelam hydrochloride to improve glycemic control in pediatric patients with type 2 diabetes mellitus have not been established. Effectiveness was not demonstrated in a 6 month, adequate and well-controlled study conducted in 141 colesevelam hydrochloride-treated pediatric patients aged 10 to 17 years with type 2 diabetes mellitus.

8.5 Geriatric Use

Primary Hyperlipidemia

Of the 1,350 patients enrolled in the hyperlipidemia clinical studies, 349 (26%) were ≥ 65 years old, and 58 (4%) were ≥ 75 years old. No overall differences in safety or effectiveness were observed between these subjects and younger subjects, and other reported clinical experience has not identified differences in responses between the elderly and younger patients, but greater sensitivity of some older individuals cannot be ruled out.

Type 2 Diabetes Mellitus

Of the 2,048 patients enrolled in the six diabetes studies, 397 (19%) were ≥ 65 years old, and 36 (2%) were ≥ 75 years old. In these trials, colesevelam hydrochloride 3.8 g/day or placebo was added onto background antidiabetic therapy. No overall differences in safety or effectiveness were observed between the elderly and younger patients, but greater sensitivity of some older individuals cannot be ruled out.

8.6 Renal Impairment

Type 2 Diabetes Mellitus

Of the 2,048 patients enrolled in the six diabetes studies, 807 (39%) had mild renal insufficiency (creatinine clearance [CrCl] 50-< 80 mL/min), 61 (3%) had moderate renal insufficiency (CrCl 30-< 50 mL/min), and none had severe renal insufficiency (CrCl < 30 mL/min), as estimated from baseline serum creatinine using the Modification of Diet in Renal Disease (MDRD) equation. No overall differences in safety or effectiveness were observed between patients with CrCl < 50 mL/min (n = 53) and those with a CrCl ≥ 50 mL/min (n = 1,075) in the add-on to metformin, sulfonylureas, and insulin diabetes studies. In the monotherapy study and add on to pioglitazone study, only 3 and 5 patients, respectively, had moderate renal insufficiency.

10 OVERDOSAGE

Colesevelam hydrochloride is not absorbed and the risk of systemic toxicity is low. Excessive doses of colesevelam hydrochloride may cause more severe local gastrointestinal effects (e.g., constipation).

11 DESCRIPTION

Colesevelam hydrochloride is a non-absorbed, polymeric, lipid-lowering and glucose-lowering agent for oral administration. Colesevelam hydrochloride is a high-capacity bile acid-binding molecule.

Colesevelam hydrochloride is poly (allylamine hydrochloride) cross-linked with epichlorohydrin and alkylated with 1-bromodecane and (6-bromohexyl)-trimethylammonium bromide. The chemical name (IUPAC) of colesevelam hydrochloride

is allylamine polymer with 1-chloro-2,3-epoxypropane, [6-(allylamino)-hexyl]trimethylammonium chloride and N-allyldecylamine, hydrochloride. The chemical structure of colesevelam hydrochloride is represented by the following formula:

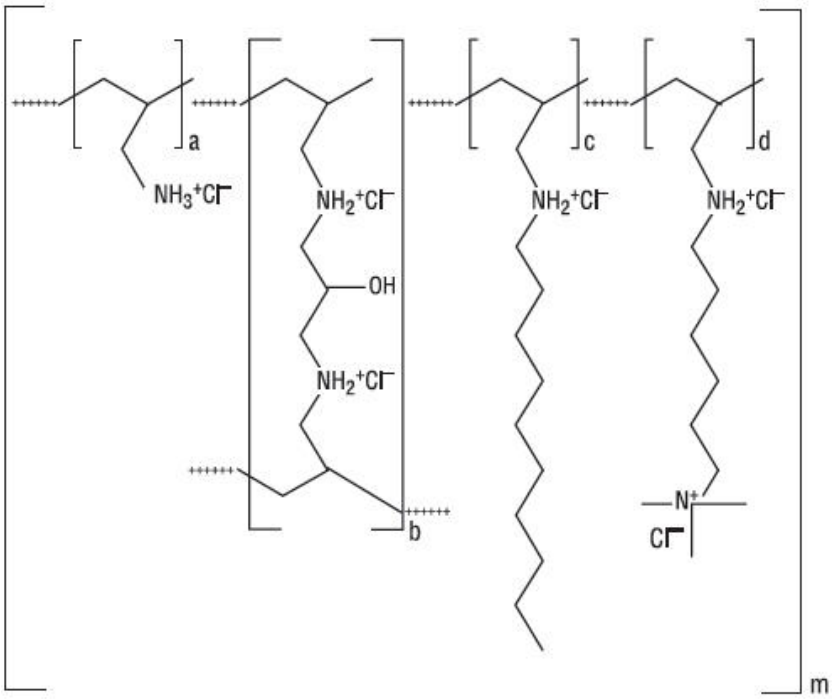

wherein (a) represents allyl amine monomer units that have not been alkylated by either of the 1-bromodecane or (6-bromohexyl)-trimethylammonium bromide alkylating agents or cross-linked by epichlorohydrin; (b) represents allyl amine units that have undergone cross-linking with epichlorohydrin; (c) represents allyl amine units that have been alkylated with a decyl group; (d) represents allyl amine units that have been alkylated with a (6-trimethylammonium) hexyl group, and m represents a number ≥ 100 to indicate an extended polymer network. A small amount of the amines are dialkylated and are not depicted in the formula above. No regular order of the groups is implied by the structure; cross-linking and alkylation are expected to occur randomly along the polymer chains. A large amount of the amines are protonated. The polymer is depicted in the hydrochloride form; a small amount of the halides are bromide. Colesevelam hydrochloride is hydrophilic and insoluble in water.

Colesevelam hydrochloride tablets are an off-white to pale yellow film-coated, oval tablets, debossed with “L61” on one side and plain on the other side, containing 625 mg colesevelam hydrochloride. In addition, each tablet contains the following inactive ingredients: colloidal silicon dioxide, copovidone, hypromellose, magnesium stearate, microcrystalline cellulose, polyethylene glycol, and talc.

12 CLINICAL PHARMACOLOGY

12.1 Mechanism of Action

Primary Hyperlipidemia: Colesevelam hydrochloride, the active pharmaceutical ingredient in colesevelam hydrochloride tablets, is a non-absorbed, lipid-lowering polymer that binds bile acids in the intestine, impeding their reabsorption. As the bile acid pool becomes depleted, the hepatic enzyme, cholesterol 7-α-hydroxylase, is upregulated, which increases the conversion of cholesterol to bile acids. This causes an increased demand for cholesterol in the liver cells, resulting in the dual effect of increasing transcription and activity of the cholesterol biosynthetic enzyme, HMG-CoA reductase, and increasing the number of hepatic LDL receptors. These compensatory effects result in increased clearance of LDL-C from the blood, resulting in decreased serum LDL-C

levels. Serum TG levels may increase or remain unchanged.

Type 2 Diabetes Mellitus: The mechanism by which colesevelam hydrochloride improves glycemic control is unknown.

12.2 Pharmacodynamics

A maximum therapeutic response to the lipid-lowering effects of colesevelam hydrochloride was achieved within 2 weeks and was maintained during long-term therapy. In the diabetes clinical studies, a therapeutic response to colesevelam hydrochloride, as reflected by a reduction in HbA1c, was initially noted following 4 to 6 weeks of treatment and reached maximal or near-maximal effect after 12 to 18 weeks of treatment.

12.3 Pharmacokinetics

Absorption

Colesevelam hydrochloride is a hydrophilic, water-insoluble polymer that is not hydrolyzed by digestive enzymes and is not absorbed.

Distribution

Colesevelam hydrochloride is not absorbed, and therefore, its distribution is limited to the gastrointestinal tract.

Elimination

Metabolism

Colesevelam hydrochloride is not metabolized systemically and does not interfere with systemic drug-metabolizing enzymes such as cytochrome P450.

Excretion

In 16 healthy volunteers, an average of 0.05% of administered radioactivity from a single ^{14}C-labeled colesevelam hydrochloride dose was excreted in the urine.

Drug Interaction Studies

Drug interactions between colesevelam and concomitantly administered drugs were screened through *in vitro* studies and confirmed in *in vivo* studies. *In vitro* studies demonstrated that cephalexin, metformin, and ciprofloxacin had negligible binding to colesevelam hydrochloride. Therefore, an *in vivo* pharmacokinetic interaction of colesevelam hydrochloride with these drugs is unlikely. Colesevelam hydrochloride was found to have no significant effect on the bioavailability of aspirin, atenolol, digoxin, enalapril, fenofibrate, lovastatin, metoprolol, phenytoin, pioglitazone, quinidine, rosiglitazone, sitagliptin, valproic acid, and warfarin. The results of additional *in vivo* drug interactions of colesevelam hydrochloride are presented in Table 6.

Table 6: Mean Change in Drug Exposure ($AUC_{0\ to\ \infty}$ and C_{max}) when Administered with Colesevelam Hydrochloride (3.75 g)*

Drug	**Dose**	**Co-administered**		**1 hr prior to Colesevelam Hydrochloride**		**4 hrs prior to Colesevelam Hydrochloride**	
		$AUC_{0\ to\ \infty}$	C_{max}	$AUC_{0\ to\ \infty}$	C_{max}	$AUC_{0\ to\ \infty}$	C_{max}
Cyclosporine	200 mg	-34%	-44%	N/A	N/A	N/A	N/A
Ethinyl Estradiol†	0.035 mg	-24%	-24%	-18%	-1%	-12%	0%
Glimepiride	4 mg	-18%	-8%	N/A	N/A	-6%	3%
Glipizide	20 mg	-12%	-13%	N/A	N/A	-4%	0%
Glyburide	3 mg	-32%	-47%	-20%	-15%	-7%	4%
	600						

Levothyroxine	600 mcg	-22%	-33%	6%	-2%	1%	8%
Metformin ER	1500 mg	44%	8%	N/A	N/A	N/A	N/A
Norethindrone[†]	1 mg	-1%	-20%	5%	-3%	6%	7%
Olmesartan Medoxomil	40 mg	-39%	-28%	N/A	N/A	-15%	-4%
Repaglinide	2 mg	-7%	-19%	-6%	-1%	N/A	N/A
Verapamil sustained-release	240 mg	-31%	-11%	N/A	N/A	N/A	N/A

[*] With verapamil, the dose of colesevelam hydrochloride was 4.5 g.
[†] Oral contraceptive containing norethindrone and ethinyl estradiol.
N/A – not available.

13 NONCLINICAL TOXICOLOGY

13.1 Carcinogenesis, Mutagenesis, Impairment of Fertility

Carcinogenesis

A 104-week carcinogenicity study with colesevelam hydrochloride was conducted in CD-1 mice, at oral dietary doses up to 3 g/kg/day. This dose was approximately 50 times the maximum recommended human dose of 4.5 g/day, based on body weight, mg/kg. There were no significant drug-induced tumor findings in male or female mice. In a 104-week carcinogenicity study with colesevelam hydrochloride in Harlan Sprague-Dawley rats, a statistically significant increase in the incidence of pancreatic acinar cell adenoma was seen in male rats at doses >1.2 g/kg/day (approximately 20 times the maximum human dose, based on body weight, mg/kg) (trend test only). A statistically significant increase in thyroid C-cell adenoma was seen in female rats at 2.4 g/kg/day (approximately 40 times the maximum human dose, based on body weight, mg/kg).

Mutagenesis

Colesevelam hydrochloride and 4 degradants present in the drug substance have been evaluated for mutagenicity in the Ames test and a mammalian chromosomal aberration test. The 4 degradants and an extract of the parent compound did not exhibit genetic toxicity in an *in vitro* bacterial mutagenesis assay in *S. typhimurium* and *E. coli* (Ames assay) with or without rat liver metabolic activation. An extract of the parent compound was positive in the Chinese Hamster Ovary (CHO) cell chromosomal aberration assay in the presence of metabolic activation and negative in the absence of metabolic activation. The results of the CHO cell chromosomal aberration assay with 2 of the 4 degradants, decylamine HCl and aminohexyltrimethyl ammonium chloride HCl, were equivocal in the absence of metabolic activation and negative in the presence of metabolic activation. The other 2 degradants, didecylamine HCl and 6-decylamino-hexyltrimethyl ammonium chloride HCl, were negative in the presence and absence of metabolic activation.

Impairment of Fertility

Colesevelam hydrochloride did not impair fertility in rats at doses up to 3 g/kg/day (approximately 50 times the maximum human dose, based on body weight, mg/kg).

13.2 Animal Toxicology and/or Pharmacology

Reproductive Toxicology Studies

Reproduction studies have been performed in rats and rabbits at doses up to 3 g/kg/day and 1 g/kg/day, respectively (approximately 50 and 17 times the maximum human dose, based on body weight, mg/kg) and have revealed no evidence of harm to the fetus due to colesevelam hydrochloride.

14 CLINICAL STUDIES

14.1 Primary Hyperlipidemia

Colesevelam hydrochloride reduces total cholesterol (TC), LDL-C, apolipoprotein B (Apo B), and non-high-density lipoprotein cholesterol (non-HDL-C) when administered alone or in combination with a statin in patients with primary hyperlipidemia.

Approximately 1,600 patients were studied in 9 clinical trials with treatment durations ranging from 4 to 50 weeks. With the exception of one open-label, uncontrolled, long-term extension study, all studies were multicenter, randomized, double-blind, and placebo-controlled. A maximum therapeutic response to colesevelam hydrochloride was achieved within 2 weeks and was maintained during long-term therapy.

Monotherapy

In a study in patients with LDL-C between 130 mg/dL and 220 mg/dL (mean 158 mg/dL), colesevelam hydrochloride was given for 24 weeks in divided doses with the morning and evening meals.

As shown in Table 7, the mean LDL-C reductions were 15% and 18% at the 3.8 g and 4.5 g doses. The respective mean TC reductions were 7% and 10%. The mean Apo B reductions were 12% in both treatment groups. Colesevelam hydrochloride at both doses increased HDL-C by 3%. Increases in TG of 9% to 10% were observed at both colesevelam hydrochloride doses, but the changes were not statistically different from placebo.

Table 7: Response to Colesevelam Hydrochloride Monotherapy in a 24-Week Trial - Percent Change in Lipid Parameters from Baseline

Grams/Day	N	TC	LDL-C	Apo B	HDL-C*	Non-HDL-C	TG*
Placebo	88	+1	0	0	–1	+1	+5
3.8 g (6 tablets)	95	–7†	–15†	–12†	+3†	–10†	+10
4.5 g (7 tablets)	94	–10†	–18†	–12†	+3	–13†	+9

* Median % change from baseline.
† $p < 0.05$ for lipid parameters compared to placebo, for Apo B compared to baseline.

In a study in 98 patients with LDL-C between 145 mg/dL and 250 mg/dL (mean 169 mg/dL), colesevelam hydrochloride 3.8 g was given for 6 weeks as a single-dose with breakfast, as a single-dose with dinner, or as divided doses with breakfast and dinner. The mean LDL-C reductions were 18%, 15%, and 18% for the 3 dosing regimens, respectively. The reductions with these 3 regimens were not statistically different from one another.

Combination Therapy

Co-administration of colesevelam hydrochloride and a statin (atorvastatin, lovastatin, or simvastatin) in 3 clinical studies demonstrated an additive reduction of LDL-C. The mean baseline LDL-C was 184 mg/dL in the atorvastatin study (range 156 mg/dL to 236 mg/dL), 171 mg/dL in the lovastatin study (range 115 mg/dL to 247 mg/dL), and 188 mg/dL in the simvastatin study (range 148 mg/dL to 352 mg/dL). As demonstrated in Table 8, colesevelam hydrochloride doses of 2.3 g to 3.8 g resulted in an additional 8% to 16% reduction in LDL-C above that seen with the statin alone.

Table 8: Response to Colesevelam Hydrochloride in Combination with Atorvastatin, Simvastatin, or Lovastatin - Percent Change in Lipid Parameters

Dose/Day	N	TC	LDL-C	Apo B	HDL-C*	Non-HDL-C	TG*
Atorvastatin Trial (4-week)							
Placebo	19	+4	+3	–3	+4	+4	+10
Atorvastatin 10 mg	18	–27†	–38†	–32†	+8	–35†	–24†
Colesevelam hydrochloride	18	–31†	–48†	–38†	+11	–40†	–1

3.8 g/Atorvastatin 10 mg	18	–51†	–48†	–58†	+11	–40†	–1
Atorvastatin 80 mg	20	–39†	–53†	–46†	+6	–50†	–33†
Simvastatin Trial (6-week)							
Placebo	33	–2	–4	–4†	–3	–2	+6†
Simvastatin 10 mg	35	–19†	–26†	–20†	+3†	–24†	–17†
Colesevelam hydrochloride 3.8 g/Simvastatin 10 mg	34	–28†	–42†	–33†	+10†	–37†	–12†
Simvastatin 20 mg	39	–23†	–34†	–26†	+7†	–30†	–12†
Colesevelam hydrochloride 2.3 g/Simvastatin 20 mg	37	–29†	–42†	–32†	+4†	–37†	–12†
Lovastatin Trial (4-week)							
Placebo	26	+1	0	0	+1	+1	+1
Lovastatin 10 mg	26	–14†	–22†	–16†	+5	–19†	0
Colesevelam hydrochloride 2.3 g/Lovastatin 10 mg Together	27	–21†	–34†	–24†	+4	–27†	–1
Colesevelam hydrochloride 2.3 g/Lovastatin 10 mg Apart	23	–21†	–32†	–24†	+2	–28†	–2

* Median % change from baseline.
† p <0.05 for lipid parameters compared to placebo, for Apo B compared to baseline.

In all 3 studies, the LDL-C reduction achieved with the combination of colesevelam hydrochloride and any given dose of statin therapy was statistically superior to that achieved with colesevelam hydrochloride or that dose of the statin alone. The LDL-C reduction with atorvastatin 80 mg was not statistically significantly different from the combination of colesevelam hydrochloride 3.8 g and atorvastatin 10 mg.

Pediatric Therapy

The safety and efficacy of colesevelam hydrochloride in pediatric patients were evaluated in an 8-week, multicenter, randomized, double-blind, placebo-controlled, parallel-group study followed by an open-label phase, in 194 boys and postmenarchal girls 10 to 17 years of age (mean age 14.1 years) with HeFH, taking a stable dose of an FDA-approved statin (with LDL-C >130 mg/dL) or naïve to lipid-lowering therapy (with LDL-C >160 mg/dL). This study had 3 periods: a single-blind, placebo stabilization period; an 8-week, randomized, double-blind, parallel-group, placebo-controlled treatment period; and an 18-week, open-label treatment period. Forty-seven (24%) patients were taking statins and 147 (76%) patients were statin-naïve at screening. The mean baseline LDL-C at Day 1 was approximately 199 mg/dL.

During the double-blind treatment period, patients were assigned randomly to treatment: Colesevelam hydrochloride 3.8 g/day (n=64), colesevelam hydrochloride 1.9 g/day (n=65), or placebo (n=65). In total, 186 patients completed the double-blind treatment period. After 8 weeks of treatment, colesevelam hydrochloride 3.8 g/day significantly decreased plasma levels of LDL-C, non-HDL-C, TC, and Apo B and significantly increased HDL-C. A moderate, non-statistically significant increase in TG was observed versus placebo (Table 9).

Table 9: Response to Colesevelam Hydrochloride 3.8 g Compared to Placebo in Pediatric Patients 10 to 17 Years of Age – Mean Percent Change in Lipid Parameters from Baseline to Week 8

Treatment Difference	**TC**	**LDL-C**	**Apo B**	**HDL-C**	**Non-HDL-C**	**TG***
	(N=128)	**(N=128)**	**(N=124)**	**(N=128)**	**(N=128)**	**(N=128)**
Colesevelam hydrochloride 3.8 g vs. Placebo	-7†	-13†	-8†	+6†	–11†	+5

* For triglycerides, median % change from baseline.
† p≤0.05 for lipid parameters compared to placebo

Values represent LS mean. Only patients with values at both study baseline and endpoint are included in this table. Study baseline was defined as the last value measured before or on Day 1 prior to the first dose of randomized study medication. Results were based on the ITT population with LOCF.

During the open-label treatment period patients were treated with colesevelam hydrochloride 3.8 g/day. In total, 173 (89%) patients completed 26 weeks of treatment. Results at Week 26 were consistent with those at Week 8.

14.2 Type 2 Diabetes Mellitus

Colesevelam hydrochloride has been studied as monotherapy and in combination with metformin, pioglitazone, sulfonylureas, and insulin. In these studies, colesevelam hydrochloride and placebo were administered either as 3 tablets twice daily with lunch and dinner or as 6 tablets with dinner alone.

Monotherapy

The efficacy of colesevelam hydrochloride 3.8 g/day as anti-diabetes monotherapy was evaluated in a randomized double-blind, placebo-controlled trial involving 357 patients (176 colesevelam hydrochloride and 181 placebo) with type 2 diabetes mellitus who were treatment-naïve or had not received antihyperglycemic medication within 3 months prior to the start of the study. Statin use at baseline was reported in 13% of the colesevelam hydrochloride-treated patients and 16% of the placebo-treated patients.

Colesevelam hydrochloride resulted in a statistically significant reduction in HbA1c of 0.27% compared to placebo (Table 10).

The mean baseline LDL-C was 121 mg/dL in the monotherapy trial. Colesevelam hydrochloride treatment resulted in a placebo-corrected 11% reduction in LDL-C. Colesevelam hydrochloride treatment also reduced serum TC, ApoB, and non-HDL-C (Table 11). The mean change in body weight was -0.6 kg for colesevelam hydrochloride and -0.7 kg for placebo treatment groups.

Table 10: Glycemic Parameters in a 24-Week Placebo-Controlled Study of Colesevelam Hydrochloride Monotherapy in Patients with Type 2 Diabetes

	Colesevelam hydrochloride 3.8 g/day	**Placebo**
HbA1c (%), Mean		
N	175	169
Baseline	8.25	8.17
Change from baseline*	-0.26	0.01
Treatment difference (p-value)	-0.27 (p = 0.013)	
FPG (mg/dL), Mean		
N	172	166
Baseline	172	168
Change from baseline*	-4.6	5.7
Treatment difference (p-value)	-10.3 (p = 0.037†)	
*Least-squares mean change calculated from an Analysis of Covariance model. †Nominal p = value, not controlled for multiplicity testing. FPG = fasting plasma glucose.		

Table 11: Percent Change in Lipid Parameters in a 24-Week Placebo-Controlled Study of Colesevelam Hydrochloride Monotherapy in Patients with Type 2 Diabetes

Dose/Day	**N***	**TC**	**LDL-C**	**Apo B**	**HDL-C**	**Non-HDL-C**	**TG†**

Colesevelam hydrochloride 3.8 g	162	-3.3‡	-10.0‡	-5.6‡	1.7	-4.4‡	-15.5
Placebo	160	1.8	1.2	0.9	-0.1	3.0	5.8

* The number of patients with analyzable data, i.e., a baseline and post-treatment value (last observation carried forward), varied slightly among different parameters. The N given represents the smallest number of patients included in the analysis for any parameter.
† Median % change from baseline.
‡ $p<0.001$ for lipid parameters compared to placebo (This more stringent criterion for statistical significance accounts for multiplicity testing of the lipid parameters, which were secondary endpoints in the diabetes trials.).

Add-on Combination Therapy

The efficacy of colesevelam hydrochloride 3.8 g/day in patients with type 2 diabetes mellitus was evaluated in 5 double-blind, placebo-controlled add-on therapy trials involving a total of 1,691 patients with baseline HbA1c 7.5 9.5%. Patients were enrolled and maintained on their pre-existing, stable, background anti-diabetic regimen. Statin use at baseline was reported in 41% of the colesevelam hydrochloride-treated patients and 48% of the placebo-treated patients.

In 3 add-on combination therapy trials (metformin, sulfonylurea and insulin), treatment with colesevelam hydrochloride resulted in a statistically significant reduction in HbA1c of 0.5% compared to placebo. Similar placebo-corrected reductions in HbA1c occurred in patients who received colesevelam hydrochloride in combination with metformin, sulfonylurea, or insulin monotherapy or combinations of these therapies with other anti-diabetic agents. In the pioglitazone trial, treatment with colesevelam hydrochloride resulted in a statistically significant reduction in HbA1c of 0.32% compared to placebo. In the metformin, pioglitazone, and sulfonylurea trials, treatment with colesevelam hydrochloride also resulted in statistically significant reductions in FPG of at least 14 mg/dL compared to placebo.

Colesevelam hydrochloride had consistent effects on HbA1c across subgroups of age, gender, race, body mass index, and baseline HbA1c. Colesevelam hydrochloride's effects on HbA1c were also similar for the two dosing regimens (3 tablets with lunch and with dinner or 6 tablets with dinner alone).

The mean baseline LDL-C was 104 mg/dL in the metformin study (range 32 to 214 mg/dL), 107 mg/dL in the pioglitazone study (range 48 to 263 mg/dL), 106 mg/dL in the sulfonylurea study (range 41 to 264 mg/dL), 102 mg/dL in the insulin study (range 35 to 204 mg/dL). In these trials, colesevelam hydrochloride treatment was associated with a 12% to 16% reduction in LDL-C levels. The percentage decreases in LDL-C were of similar magnitude to those observed in patients with primary hyperlipidemia. Colesevelam hydrochloride treatment was associated with statistically significant increases in TG levels in the studies of patients on insulin, patients on a sulfonylurea, and patients on pioglitazone but not in the study of patients on metformin. The clinical significance of these increases is unknown. Colesevelam hydrochloride is contraindicated in patients with TG levels >500 mg/dL *[see Contraindications (4)]*, and periodic monitoring of lipid parameters including TG is recommended *[see Warnings and Precautions (5.1) and Adverse Reactions (6.1)]*.

Body weight did not significantly increase from baseline with colesevelam hydrochloride therapy, compared with placebo, in any of the add-on combination diabetes studies.

Add-on Combination Therapy with Metformin

Colesevelam hydrochloride 3.8 g/day or placebo was added to background anti-diabetic therapy in a 26-week trial of 316 patients already receiving treatment with metformin alone (N=159) or metformin in combination with other oral agents (N=157). A total of 60% of these patients were receiving ≥1,500 mg/day of metformin. In combination with metformin, colesevelam hydrochloride resulted in statistically significant placebo-corrected reductions in HbA1c and FPG (Table 12). Colesevelam hydrochloride also reduced TC, LDL-C, Apo B, and non-HDL-C (Table 13). The mean percent change in

serum LDL-C levels with colesevelam hydrochloride compared to placebo was -16% among statin users and statin non-users; the median percent change in serum TG levels with colesevelam hydrochloride compared to placebo was -2% among statin users and 10% among statin non-users. The mean change in body weight was -0.5 kg for colesevelam hydrochloride and -0.3 kg for placebo.

Table 12: Glycemic Parameters in a 26-Week Placebo-Controlled Study of Colesevelam Hydrochloride in Combination with Metformin in Patients with Type 2 Diabetes

	Total Patient Population		**Metformin Alone**		**Metformin in Combination with Other Oral Anti-diabetic Agents**	
	Colesevelam hydrochloride 3.8 g/day	**Placebo**	**Colesevelam hydrochloride 3.8 g/day**	**Placebo**	**Colesevelam hydrochloride 3.8 g/day**	**Placebo**
HbA1c (%), Mean						
N	148	152	79	76	69	76
Baseline	8.1	8.1	8.2	8.2	8.1	8.
Change from baseline*	-0.4	0.2	-0.4	0.0	-0.4	0.3
Treatment difference (p-value)	-0.5 (p < 0.001)		-0.5 (p = 0.002)		-0.6 (p < 0.001)	
FPG (mg/dL), Mean						
N	149	152	79	76	70	76
Baseline	178	174	184	180	171	168
Change from baseline*	-3	11	-7	8	0	13
Treatment difference (p- value)	-14 (p = 0.01)		-14 (p = 0.07)		-14 (p = 0.10)	
* Least-squares mean change calculated from an Analysis of Covariance model.						

Table 13: Percent Change in Lipid Parameters in a 26-Week Placebo-Controlled Study of Colesevelam Hydrochloride in Combination with Metformin in Patients with Type 2 Diabetes

Dose/Day	**N***	**TC**	**LDL-C**	**Apo B**	**HDL-C**	**Non-HDL-C**	**TG†**
Total Patient Population							
Colesevelam hydrochloride 3.8 g	125	-4‡	-12‡	-4‡	1	-6‡	12
Placebo	126	3	4	4	0	5	7
Metformin Alone							
Colesevelam hydrochloride 3.8 g	66	-3	-9	-2	1	-4	15
Placebo	61	2	0	1	-2	4	8
Metformin in Combination with Other Oral Anti-diabetic Agents							
Colesevelam hydrochloride 3.8 g	59	-6‡	-15‡	-6‡	1	-7‡	8
Placebo	65	4	7	7	2	6	5

* The number of patients with analyzable data, i.e., a baseline and post-treatment value (last observation carried forward), varied slightly among different parameters. The N given represents the smallest number of patients included in the analysis for any parameter. † Median % change from baseline. ‡ p<0.001 for lipid parameters compared to placebo (This more stringent criterion for statistical significance accounts for multiplicity testing of the lipid parameters, which were secondary endpoints in the diabetes trials.).

Add-on Combination Therapy with Pioglitazone

Colesevelam hydrochloride 3.8 g/day or placebo was added to background anti-diabetic therapy in a 24-week trial of 562 patients already receiving treatment with pioglitazone alone (N=51) or pioglitazone in combination with other oral agents (N=511). Of these, most were on dual therapy with metformin (N=298) or triple therapy with metformin and a sulfonylurea (N=139). In combination with pioglitazone-based therapy, colesevelam hydrochloride resulted in statistically significant reductions in HbA1c and FPG compared to placebo (Table 14). Colesevelam hydrochloride also reduced TC, LDL-C, Apo B, and non-HDL-C but increased serum TG (Table 15). The mean change in body weight was 0.8 kg for colesevelam hydrochloride and 0.4 kg for placebo.

Table 14: Glycemic Parameters in a 24-Week Placebo-Controlled Study of Colesevelam Hydrochloride in Combination with Pioglitazone-Based Therapy in Patients with Type 2 Diabetes

	Colesevelam Hydrochloride 3.8 g/day	**Placebo**
HbA1c (%), Mean		
N	271	276
Baseline	8.2	8.1
Change from baseline*	-0.34	-0.02
Treatment difference (p-value)	-0.32 (0.0001)	
FPG (mg/dL), Mean		
N	268	270
Baseline	155	157
Change from baseline*	-4.8	+9.9
Treatment difference (p- value)	-14.7 (< 0.0001)	
* Least-squares mean change calculated from an Analysis of Covariance model.		

Table 15: Percent Change in Lipid Parameters in a 24-Week Placebo-Controlled Study of Colesevelam Hydrochloride in Combination with Pioglitazone-Based Therapy in Patients with Type 2 Diabetes

Dose/Day	**N***	**TC**	**LDL-C**	**Apo B**	**HDL-C**	**Non-HDL-C**	**TG†**
Total Patient Cohort							
Colesevelam hydrochloride 3.8 g	262	-3‡	-9‡	-5‡	+3	-5‡	+14‡
Placebo	262	+3	+7	+4	+1	+5	+2
* The N given represents the smallest number of patients included in the analysis for any parameter. † Median % change from baseline. ‡ p<0.001 for lipid parameters compared to placebo.							

Add-on Combination Therapy with Sulfonylurea

Colesevelam hydrochloride 3.8 g/day or placebo was added to background anti-diabetic

therapy in a 26-week trial of 460 patients already treated with sulfonylurea alone (N=156) or sulfonylurea in combination with other oral agents (N=304). A total of 72% of these patients were receiving at least half-maximal doses of sulfonylurea therapy. In combination with a sulfonylurea, colesevelam hydrochloride resulted in statistically significant placebo-corrected reductions in HbA1c and FPG (Table 16). Colesevelam hydrochloride also reduced TC, LDL-C, Apo B, and non-HDL-C, but increased serum TG (Table 17). The mean percent change in serum LDL-C levels with colesevelam hydrochloride compared to placebo was -18% among statin users and -15% among statin non-users; the median percent increase in serum TG with colesevelam hydrochloride compared to placebo was 29% among statin users and 9% among statin non-users. The mean change in body weight was 0.0 kg for colesevelam hydrochloride and 0.4 kg for placebo.

Table 16: Glycemic Parameters in a 26-Week Placebo-Controlled Study of Colesevelam Hydrochloride in Combination with Sulfonylurea in Patients with Type 2 Diabetes

	Total Patient Population		**Sulfonylurea Alone**		**Sulfonylurea in Combination with Other Oral Anti-diabetic Agents**	
	Colesevelam hydrochloride 3.8 g/day	**Placebo**	**Colesevelam hydrochloride 3.8 g/day**	**Placebo**	**Colesevelam hydrochloride 3.8 g/day**	**Placebo**
HbA1c (%), Mean						
n	218	218	69	80	149	138
Baseline	8.2	8.3	8.2	8.4	8.2	8.3
Change from baseline*	-0.3	0.2	-0.3	0.5	-0.4	0.0
Treatment difference (p-value)	-0.5 ($p < 0.001$)		-0.8 ($p < 0.001$)		-0.4 ($p < 0.001$)	
FPG (mg/dL), Mean						
n	218	217	70	80	148	137
Baseline	177	181	181	186	175	178
Change from baseline*	-4	10	3	15	-11	4
Treatment difference (p- value)	-14 ($p = 0.009$)		-12 ($p = 0.18$)		-14 ($p = 0.03$)	
* Least-squares mean change calculated from an Analysis of Covariance model.						

Table 17: Percent Change in Lipid Parameters in a 26-Week Placebo-Controlled Study of Colesevelam Hydrochloride in Combination with Sulfonylurea in Patients with Type 2 Diabetes

Dose/Day	**N***	**TC**	**LDL-C**	**Apo B**	**HDL-C**	**Non-HDL-C**	**TG†**
Total Patient Population							
Colesevelam hydrochloride 3.8 g	186	-5‡	-16‡	-6‡	1	-6‡	20‡
Placebo	193	0	1	1	0	1	1
Sulfonylurea Alone							
Colesevelam hydrochloride	57	-5	-14‡	-5	-1	-6	17

3.8 g							
Placebo	68	0	1	1	1	0	-1
Sulfonylurea in Combination with Other Oral Anti-diabetic Agents							
Colesevelam hydrochloride 3.8 g	129	-5	-18‡	-7‡	1	-6	21‡
Placebo	125	0	0	1	0	1	2

* The number of patients with analyzable data, i.e., a baseline and post-treatment value (last observation carried forward), varied slightly among different parameters. The N given represents the smallest number of patients included in the analysis for any parameter.
† Median % change from baseline.
‡ p<0.001 for lipid parameters compared to placebo (This more stringent criterion for statistical significance accounts for multiplicity testing of the lipid parameters, which were secondary endpoints in the diabetes trials.).

Add-on Combination Therapy with Insulin

Colesevelam hydrochloride 3.8 g/day or placebo was added to background anti-diabetic therapy in a 16-week trial of 287 patients already treated with insulin alone (N=116) or insulin in combination with oral agents (N=171). At baseline, the median daily insulin dose was 70 units in the colesevelam hydrochloride group and 65 units in the placebo group. In combination with insulin, colesevelam hydrochloride resulted in a statistically significant placebo-corrected reduction in HbA1c (Table 18). Colesevelam hydrochloride also reduced LDL-C and Apo B, but increased serum TG (Table 19). The mean percent change in serum LDL-C levels with colesevelam hydrochloride compared to placebo was 13% among statin users and statin non-users; the median percent increase in serum TG levels with colesevelam hydrochloride compared to placebo was 24% among statin users and 17% among statin non-users. The mean change in body weight was 0.6 kg for colesevelam hydrochloride and 0.2 kg for placebo.

Table 18: Glycemic Parameters in a 16-Week Placebo-Controlled Study of Colesevelam Hydrochloride in Combination with Insulin in Patients with Type 2 Diabetes

	Total Patient Population		**Insulin Alone**		**Insulin in Combination with Oral Anti-diabetic Agents**	
	Colesevelam hydrochloride 3.8 g/day	**Placebo**	**Colesevelam hydrochloride 3.8 g/day**	**Placebo**	**Colesevelam hydrochloride 3.8 g/day**	**Placebo**
HbA1c (%), Mean						
n	144	136	54	55	90	81
Baseline	8.3	8.2	8.2	8.3	8.3	8.2
Change from baseline*	-0.4	0.1	-0.4	0.2	-0.4	0.0
Treatment difference (p-value)	-0.5 (p < 0.001)		-0.6 (p < 0.001)		-0.4 (p < 0.001)	
FPG (mg/dL), Mean						
n	144	136	54	55	90	81
Baseline	165	151	165	163	165	143
Change from baseline*	2	16	8	17	-4	14
Treatment difference (p- value)	-15 (p = 0.08)		-9 (p = 0.51)		-18 (p = 0.09)	

* Least-squares mean change calculated from an Analysis of Covariance model.

Table 19: Percent Change in Lipid Parameters in a 16-Week Placebo-Controlled Study of Colesevelam Hydrochloride in Combination with Insulin in Patients with Type 2 Diabetes

Dose/Day	N*	TC	LDL-C	Apo B	HDL-C	Non-HDL-C	TG†
Total Patient Cohort							
Colesevelam hydrochloride 3.8 g	129	-3	-12‡	-4	-1	-3	23‡
Placebo	121	1	1	1	0	1	0
Insulin Alone							
Colesevelam hydrochloride 3.8 g	46	-3	-12	-5	0	-3	19
Placebo	48	2	4	2	3	2	-2
Insulin in Combination with Oral Anti-diabetic Agents							
Colesevelam hydrochloride 3.8 g	83	-4	-13	-4	-1	-3	25‡
Placebo	73	-1	-3	0	-1	-1	2

* The number of patients with analyzable data, i.e., a baseline and post-treatment value (last observation carried forward), varied slightly among different parameters. The N given represents the smallest number of patients included in the analysis for any parameter.
† Median % change from baseline.
‡ $p<0.001$ for lipid parameters compared to placebo (This more stringent criterion for statistical significance accounts for multiplicity testing of the lipid parameters, which were secondary endpoints in the diabetes trials.).

16 HOW SUPPLIED/STORAGE AND HANDLING

Colesevelam Hydrochloride Tablets, **625 mg** are supplied as off-white to pale yellow, film-coated oval tablets, debossed with “L61” on one side and plain on the other side. Colesevelam hydrochloride tablets are available as follows:

- Bottles of 180: NDC 0115-1320-19

Store at 20° to 25°C (68° to 77°F) [see USP Controlled Room Temperature]. Protect from moisture.

17 PATIENT COUNSELING INFORMATION

Hypertriglyceridemia and Pancreatitis

Inform patients that colesevelam hydrochloride may increase their serum triglycerides which can lead to hypertriglyceridemia and pancreatitis. Instruct patients to discontinue colesevelam hydrochloride and seek prompt medical attention if the symptoms of acute pancreatitis occur (e.g., severe abdominal pain with or without nausea and vomiting) *[see Warnings and Precautions (5.1)].*

Gastrointestinal

Inform patients that colesevelam hydrochloride may cause bowel obstruction. Instruct patients to promptly discontinue colesevelam hydrochloride and seek medical attention if severe abdominal pain or severe constipation occurs *[see Warnings and Precautions (5.2)].*

Drug and Vitamin Interactions

Advise patients that colesevelam hydrochloride has drug interactions, and colesevelam hydrochloride may decrease the absorption of fat-soluble vitamins A, D, E, and K. Instruct patients to take oral vitamins at least 4 hours prior to colesevelam hydrochloride. Instruct patients to inform their physician about all the drugs and vitamins that they are prescribed or take over the counter *[see Warnings and Precautions (5.3)* and *Drug Interactions (7)].*

Hypertriglyceridemia and Cardiovascular Disease

Inform patients that colesevelam hydrochloride may increase serum triglycerides and that the long-term effect of hypertriglyceridemia on the risk of coronary artery disease is uncertain *[see Warnings and Precautions (5.1)].*

Administration *[see Dosage and Administration (2.2, 2.4)]:*

Tablets

Advise patients to take colesevelam hydrochloride tablets with a meal and liquid. Inform patients that colesevelam hydrochloride tablets can be taken as 6 tablets once daily or 3 tablets twice daily.

Females of Reproductive Potential

Advise females of reproductive potential that colesevelam hydrochloride may reduce the effectiveness of oral contraceptives, and to take oral contraceptives at least 4 hours before taking colesevelam hydrochloride *[see Drug Interactions (7.1)* and *Use in Specific Populations (8.3)].*

Manufactured by:
Amneal Pharmaceuticals Pvt. Ltd.
Ahmedabad 382220, INDIA

Distributed by:
Amneal Pharmaceuticals LLC
Bridgewater, NJ 08807

Rev. 09-2024-02

PRINCIPAL DISPLAY PANEL

NDC 0115-1320-19

Colesevelam Hydrochloride Tablets, 625 mg

180 Tablets

Amneal Pharmaceutical LLC

COLESEVELAM HYDROCHLORIDE
colesevelam hydrochloride tablet, coated

Product Information

Product Type	HUMAN PRESCRIPTION DRUG	**Item Code (Source)**	NDC:0115-1320
Route of Administration	ORAL		

Active Ingredient/Active Moiety

Ingredient Name	Basis of Strength	Strength
COLESEVELAM HYDROCHLORIDE (UNII: P4SG24W5Q) (COLESEVELAM - UNII:1XU104G55N)	COLESEVELAM HYDROCHLORIDE	625 mg

Inactive Ingredients

Ingredient Name	Strength
SILICON DIOXIDE (UNII: ETJ7Z6XBU4)	
COPOVIDONE K25-31 (UNII: D9C330MD8B)	
HYPROMELLOSE 2910 (6 MPA.S) (UNII: 0WZ8WG20P6)	
HYPROMELLOSE 2910 (15 MPA.S) (UNII: 36SFW2JZ0W)	
MAGNESIUM STEARATE (UNII: 70097M6I30)	
CELLULOSE, MICROCRYSTALLINE (UNII: OP1R32D61U)	
POLYETHYLENE GLYCOL 6000 (UNII: 30IQX730WE)	
TALC (UNII: 7SEV7J4R1U)	

Product Characteristics

Color	white (off-white to pale yellow)	**Score**	no score
Shape	OVAL	**Size**	8mm
Flavor		**Imprint Code**	L61
Contains			

Packaging

#	Item Code	Package Description	Marketing Start Date	Marketing End Date
1	NDC:0115-1320-19	180 in 1 BOTTLE; Type 0: Not a Combination Product	05/17/2018	

Marketing Information

Marketing Category	Application Number or Monograph Citation	Marketing Start Date	Marketing End Date
ANDA	ANDA091600	05/17/2018	

Labeler - Amneal Pharmaceuticals of New York LLC (123797875)

Revised: 9/2024 Amneal Pharmaceuticals of New York LLC